## Linealuce

**Design Jean-Michel Wilmotte** **iGuzzini**

Last information update: October 2024

**Product configuration: UC34**
UC34: 47 Recessed Integral – 220-240Vac DMX512-RDM – L=907mm – Wide Flood Wall Grazing optic

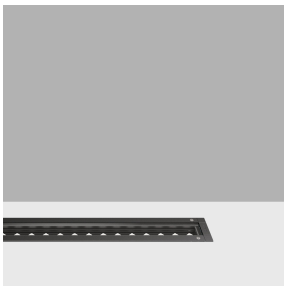

**Product code**
UC34: 47 Recessed Integral – 220-240Vac DMX512-RDM – L=907mm – Wide Flood Wall Grazing optic

**Technical description**
Direct light luminaire, designed to use RGBW LED lamps, 220÷240Vac dimmable DMX512-RDM with searching and addressing function and transparent glass cover. Ground-, wall- and ceiling-recessed. Option of installation in continuous lines of up to a max length of 10.5m only for ground-recessed installation. Made up of a body, end caps, an outer casing and caps to be ordered separately. Extruded aluminium body, with die-cast aluminium end caps complete with silicone seals. The painting process includes a multi-step, pre-treatment process, in which the main phases are degreasing, fluorozirconation (a protective surface film) and sealing (with a nano-structured silane layer). The following painting stage consists of a primer and a liquid acrylic paint, cured at 150°C, with a high level of weather and UV ray resistance. Lower PPS (polyphenylene sulfide) box for control gear. The top of the optical assembly is closed by an 8mm thick, transparent extra clear glass screen with serigraphy and fixed with silicone. It is completed with a multi-LED plate with individual red and green LEDs. Blue and white in the 4000K (RGBW) version and a 220÷240Vac DMX-RDM electronic driver (ballast included). Fitted with optics with a plastic (methacrylate) lens. At the bottom of the optical assembly there is a PPS (polyphenylene sulfide) box fitted with two nickel-plated brass cable glands PG11 and outlet cables for pass-through wiring (connectors to be ordered separately). To fix the optical assembly to the outer casing or false ceiling the product has a quick coupling system using an Allen key. All external screws used are made of A2 stainless steel.

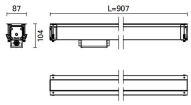


**Installation**
Ground- and wall-recessed using the outer casing, to be ordered separately, together with the end caps for the optical assembly and outer casing caps. Option of installation in continuous lines of up to a max length of 10.5m only for ground-recessed installation: in this case, too, the joints for the outer casings must be ordered separately. For ground installation a drainage channel must be created or gravel inserted for drainage under the outer casing before installation, to guarantee the degree of protection stated. For ceiling-mounting with plasterboard panels (1-30 mm thick), make the preparation openings as indicated in the instructions sheet and use the steel cables with reinforcement plates in the accessory kit.

| Colour | Weight (Kg) |
|---|---|
| White (01) \| Black (04) \| Grey (15) \| Rust Brown (F5) | 4.16 |

**Mounting**
wall recessed|Floor recessed|ceiling recessed|ground recessed

**Wiring**
Complete with DMX-RDM control card and a 220÷240Vac electronic ballast. For the electrical connection the product has a lower box with two nickel-plated brass cable glands PG11 and 05RN-F 4x (2x1,5mm²+3x0,35mm²) outlet cables for pass-through wiring (connectors to be ordered separately).

**Notes**
Product complete with LED lamp. DMX specifications require the insertion of a 120 Ohm terminating resistor to be placed between the DATA+ and DATA- cables of the last product in the line (BZQ7).

Complies with EN60598-1 and pertinent regulations

IK10 2000 kg IP67 CE UK CA

The lighting fi xtures were designed and tested to withstand a static load of up to 20000 N.

**Technical data**

| | | | |
|---|---|---|---|
| lm system: | 1119 | Life Time LED 1: | 100,000h - L80 - B10 (Ta 25°C) |
| W system: | 22.2 | Life Time LED 2: | 100,000h - L80 - B10 (Ta 40°C) |
| lm source: | 1670 | Voltage [Vin]: | 230 |
| W source: | 15 | Lamp code: | LED |
| Luminous efficiency (lm/W, real value): | 50.4 | Number of lamps for optical assembly: | 1 |
| lm in emergency mode: | - | ZVEI Code: | LED |
| Total light flux at or above an angle of 90° [Lm]: | 1119 | Number of optical assemblies: | 1 |
| Light Output Ratio (L.O.R.) [%]: | 67 | Intervallo temperatura ambiente: | from -30°C to 50°C. |
| CRI (typical): | 82 | Control: | DMX-RDM |
| Colour temperature [K]: | RGBW - 4000K | | |
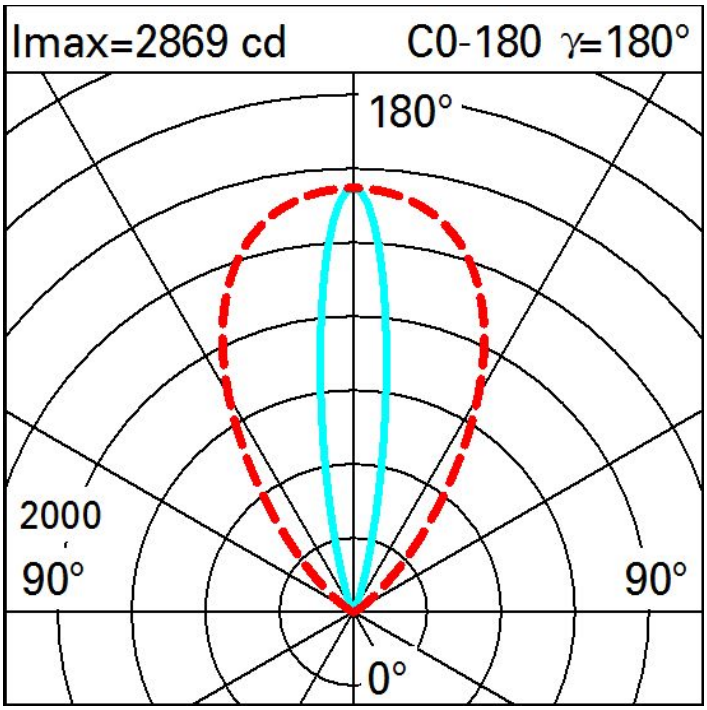
**Polar**